Voice-Controlled Wheelchair

Branch : Mechanical Engineering, IIT Indore

Presented to – Dr. I.A.Palani

Group Members:

1. Jaajimoggala Ramaraju - 230003028
2. Sanganaboina Manjunatha - 230003067
3. Banoth Santhosh - 230003014
4. Mannem Hari Shankar Goud - 220003051
5. Chintala Prajay Verma - 230003018

1. Introduction

This project aims to design and develop a low-cost, voice-controlled wheelchair that enables physically challenged individuals to navigate their environment using simple verbal commands. The system translates voice inputs (transmitted via Bluetooth) into motion commands that control the wheelchair's motors. The project focuses on accessibility, affordability, and ease of use, providing a practical assistive mobility solution.

2. Objective:

• To enable hands-free wheelchair control using Bluetooth-transmitted voice commands.
• To design a robust and reliable system that ensures user safety and smooth operation.
• To create a cost-effective prototype using readily available Arduino components.

3. Components Used:-

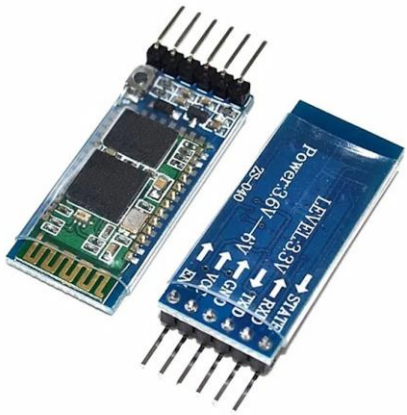

Arduino UNO: Acts as the main controller, interpreting Bluetooth commands and sending signals to the motor driver.

HC-05 Bluetooth Module: Receives wireless voice commands from a smartphone or voice-recognition module.

L293D Motor Driver Shield (AF Motor Shield): Drives and controls the direction of two DC motors.

DC Motors (2 units): Provide the motion for forward, backward, left, and right movement of the wheelchair.

Power Supply (Battery): Powers both the Arduino and the Motor Driver.

Switch: controls the power on and off.

4. Circuit Description and Diagram:

1. The HC-05 Bluetooth module is connected to Arduino pins 11 (RX) and 10 (TX).
2. The AF Motor shield is mounted on the Arduino, controlling Motor1 (M1) and Motor2 (M2).
3. The motors are powered by an external battery, ensuring sufficient current for movement.
4. The Arduino receives Bluetooth signals and drives the motors according to the decoded command.

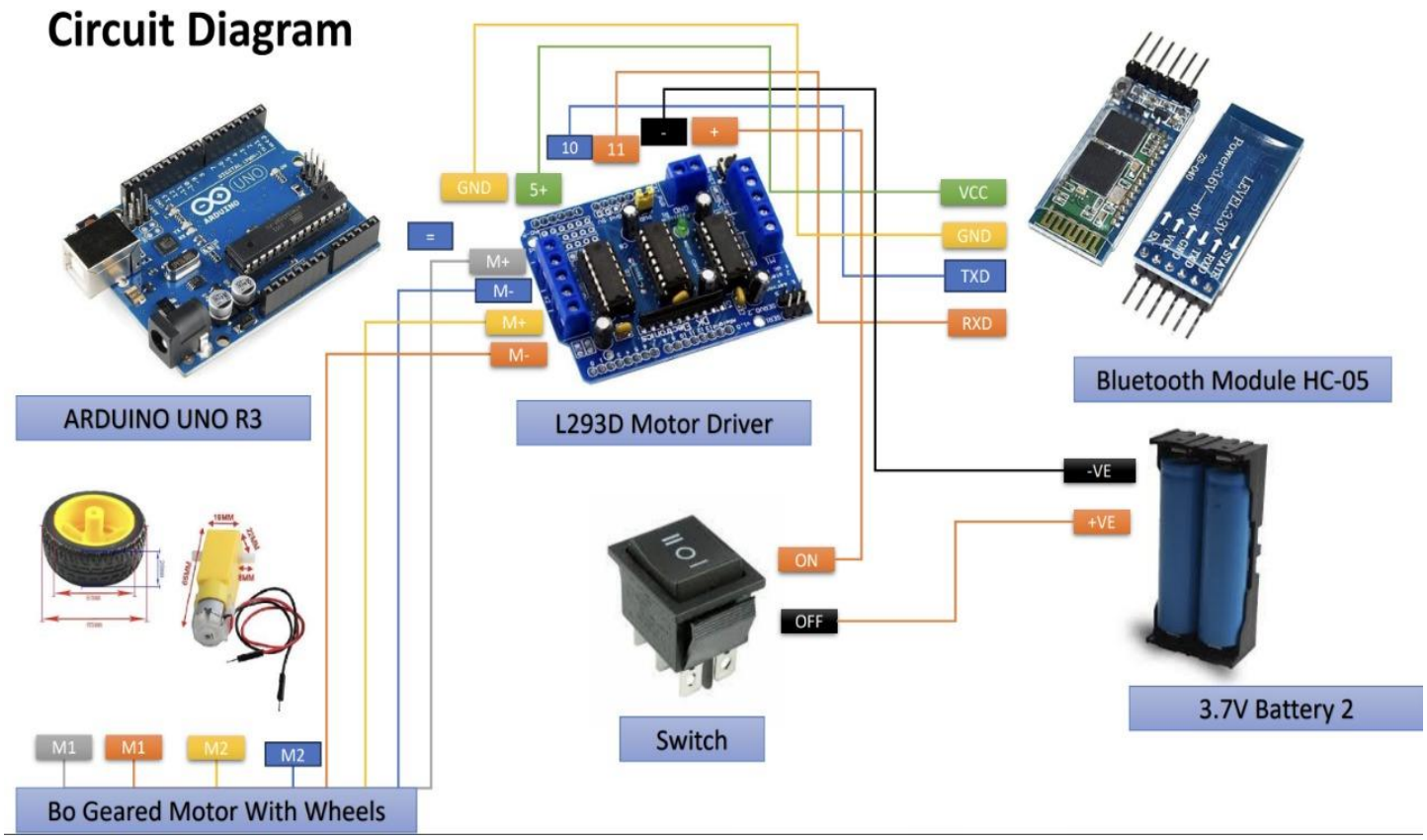

5. Flow of Operation

1. Voice Command – User gives a command like “Forward”, “Backward”, “Left”, “Right”, and “Stop” through a smartphone.
2. Bluetooth Transmission – The smartphone app converts speech to text commands (‘F’, ‘B’, ‘L’, ‘R’, ‘S’) and sends it via Bluetooth.
3. Arduino Processing – The Arduino receives the character command and runs the corresponding motor action.
4. Motor Actuation – The motor driver activates the DC motors to move the wheelchair as directed.

6. Command Transmission

F: Both motors move forward — wheelchair moves ahead.

B: Both motors move backward — wheelchair moves backward.

L: Left motor runs forward and right motor runs backward — wheelchair turns left.

R: Right motor runs forward and left motor runs backward — wheelchair turns right.

S: Both motors stop — wheelchair halts.

7. Arduino Code

```
#include <AFMotor.h>
#include <SoftwareSerial.h>

SoftwareSerial BT(10, 11);

AF_DCMotor motor1(1);
AF_DCMotor motor2(2);

int turnTime = 400;   // milliseconds

void setup() {
  Serial.begin(9600);
  BT.begin(9600);
  motor1.setSpeed(100);
  motor2.setSpeed(100);
  motor1.run(RELEASE);
  motor2.run(RELEASE);
}

void rotateLeft90() {
  motor1.run(FORWARD);
  motor2.run(BACKWARD);
  delay(turnTime);
  motor1.run(RELEASE);
  motor2.run(RELEASE);
}

void rotateRight90() {
  motor1.run(BACKWARD);
  motor2.run(FORWARD);
  delay(turnTime);
  motor1.run(RELEASE);
  motor2.run(RELEASE);
}
```

```
void loop() {
  if (BT.available()) {
    char c = BT.read();
    Serial.println(c);

    if (c == 'F') {
      motor1.run(FORWARD);
      motor2.run(FORWARD);
    }
    else if (c == 'B') {
      motor1.run(BACKWARD);
      motor2.run(BACKWARD);
    }
    else if (c == 'L') {
      rotateLeft90();
    }
    else if (c == 'R') {
      rotateRight90();
    }
    else if (c == 'S') {
      motor1.run(RELEASE);
      motor2.run(RELEASE);
    }
  }
}
```

8. Advantages

• Hands-free operation — convenient for users with limited mobility.
• Low cost — uses open-source and easily available components.
• Customizable — Arduino platform allows expansion with sensors or IoT modules.
• Compact and efficient — two-motor system simplifies mechanical design.

9. Limitations and Future Scope

Limitations:
• Performance may drop in noisy environments due to speech recognition errors.
• Requires periodic battery recharging.

Future Enhancements:
• Integrate ultrasonic sensors for obstacle avoidance.
• Implement AI-based voice recognition to support multiple accents.
• Add GPS and IoT connectivity for remote monitoring.
• Introduce automatic braking for safety in emergency conditions.

10. Conclusion

The Bluetooth-based voice-controlled wheelchair successfully demonstrates how assistive mobility can be improved using affordable embedded systems. By combining Arduino, Bluetooth communication, and motor control, it offers a simple yet effective way to help differently-abled individuals move independently and confidently.